Surfa® 1 Surface Mount Channel

Shown with closed end cap

At only a third of an inch high, the Surfa 1 is ideal for general low-profile surface mounting of LED tape light. Surfa 1 corner connectors can be used to link channel sections seamlessly around corners, while straight connectors can join straight sections of channel for longer runs.

- Thermally-balanced design for maximum cooling
- Channel covers protect LED tape light
- Diffuser covers provide smooth light diffusion with no hotspots
- Full range of accessories for a great-looking installation
- Complete kits available to create a finished fixture

Focaline Optical Lens Covers

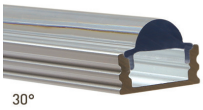

PRODUCT INFORMATION

Item Number	Description
AL-50-03-0111-KIT*	4 ft. aluminum kit includes 1 channel, 1 diffuser cover, 2 pairs of plastic end caps, and 5 mounting clips and screws
AL-50-03-0111-KIT-BL*	4 ft. matte black kit includes 1 channel, 1 diffuser cover, 2 pairs of black plastic end caps, 5 mounting black clips and 5 silver screws
AL-50-03-0111-KIT-WH*	4 ft. gloss white kit includes 1 channel, 1 diffuser cover, 2 pairs of white plastic end caps, 5 mounting white clips and 5 silver screws
AL-50-03-0115-KIT*	7 ft. aluminum kit includes 1 channel, 1 diffuser cover, 4 pairs of plastic end caps, and 9 mounting clips and screws
AL-50-03-0115-KIT-BL*	7 ft. matte black kit includes 1 channel, 1 diffuser cover, 4 pairs of black plastic end caps, 10 mounting black clips and 10 silver screws
AL-50-03-0115-KIT-WH*	7 ft. gloss white kit includes 1 channel, 1 diffuser cover, 4 pairs of white plastic end caps, 10 mounting white clips and 10 silver screws
AL-50-03-0011-AL-PART	Channel - 4 ft. - aluminum finish
AL-50-03-0015-AL-PART	Channel - 7 ft. - aluminum finish
AL-50-03-9902-FRT	Diffuser cover - 4 ft.
AL-50-03-9905-FRT	Diffuser cover - 7 ft.
AL-50-03-9912-CLR	Clear cover - 4 ft.
AL-50-03-9915-CLR	Clear cover - 7 ft
AL-50-03-9922-30	Surfa 1 - Focaline™ Optical Lens Cover - 30° - 4 ft. (includes 1 pair pack of optic end caps)
AL-50-03-9925-30	Surfa 1 - Focaline Optical Lens Cover - 30° - 7 ft. (includes 2 pair pack of optic end caps)
AL-50-03-9951-SL	Plastic end caps 2 pair pack: 2 open, 2 closed with screws
AL-50-03-9956-SL	Plastic end caps 10 pair pack: 10 open, 10 closed with screws
AL-50-03-9986-WH	Mounting clips/screws - 5-pack
AL-50-03-9991-WH	90° plastic mounting clip and screw
AL-50-03-9991-BL	90° plastic mounting clips and screws - Black - 5-pack
AL-50-03-9991-WHITE	90° plastic mounting clips and screws - White - 5-pack
AL-50-03-9992-WH	Straight connector - plastic
AL-50-03-9992-WHITE	Straight connector - white plastic
AL-50-03-9992-BL	Straight connector - black plastic
AL-50-03-9993-WH	Corner connector - plastic
AL-50-03-9993-WHITE	Corner connector - white plastic
AL-50-03-9993-BL	Corner connector - black plastic

*Add -20 or -40 to the end of the item number for discounted bundles.

This channel is compatible with selected tape light models only, see the “Channel and Tape Light Compatibility and Hotspot Guide” PDF on the Resources page on our website for information.

DIMENSIONS

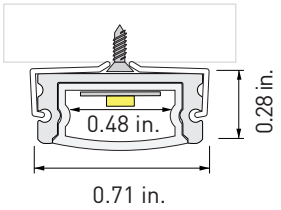

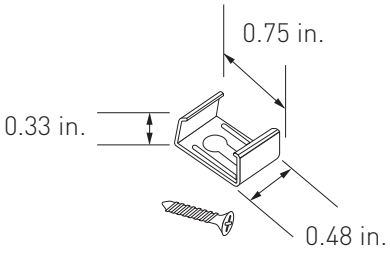

Mounting Clip

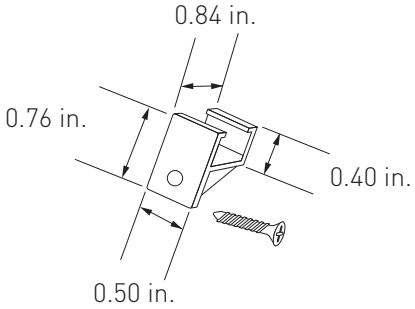

90° Mounting Clip

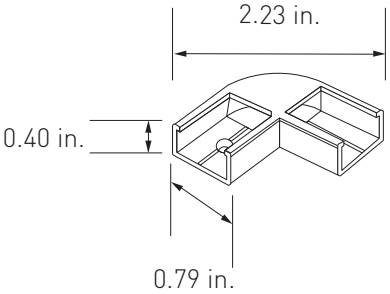

Corner Connector

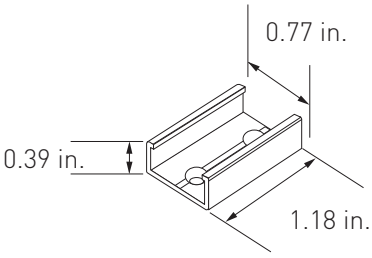

Straight Connector

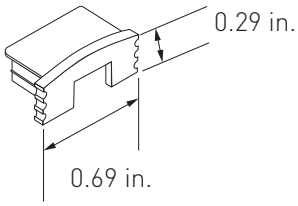

End Cap

COMPLETE SOLUTION

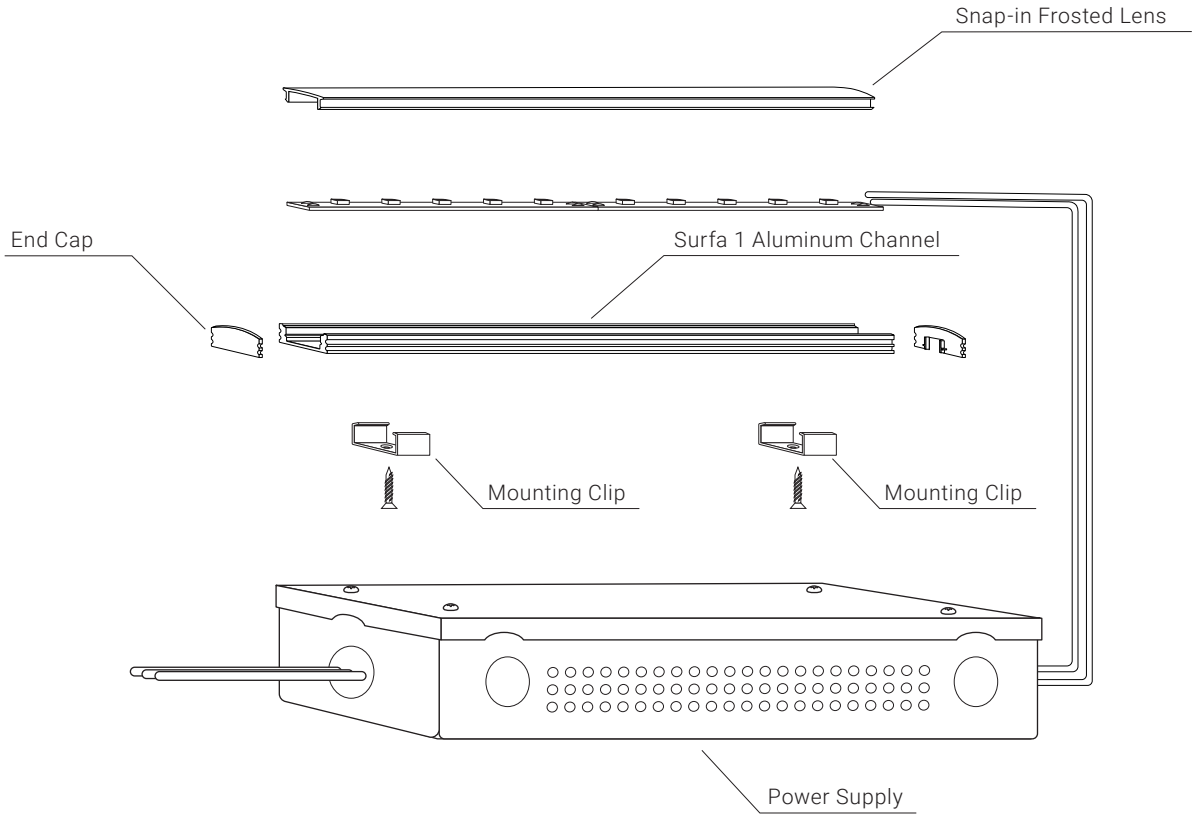

SURFA 1 AND TAPE LIGHT HOTSPOT AND COMPATIBILITY GUIDE

Tape Light	Wire Connector	AmpChamp	Hotspot
PrimaLine® 1.5	S		5
PrimaLine 1.5 XT	S		5
PrimaLine 2.5 COB	S		0
PrimaLine 2.7 LP	S		0
PrimaLine 3	S		3
PrimaLine 3 XT	S		3
PrimaLine 4.4 Gen 2	S		4
PrimaLine 4.4 XT Gen 2	S		4
PrimaLine 5.5 LP	S		0
PrimaLine 6.6 Gen 2			N/A
PrimaLine 7	S		3
PrimaLine 8 Gen 2			N/A
Varien™ 5.5 Dim-to-Warm	S		2~5
Radialux® 2.2 RGB	S		4
Radialux 4.2 COB RGB			1
Radialux 4.4 RGB	S		5
Radialux 4.4 RGBW			N/A
Radialux 4.7 LP RGBW	S		2
Radialux 5.9 RGBW			N/A
Radialux 8.8 RGB			N/A
PrimaLine 1.5 Wet	Y*		5
PrimaLine 1.5 XT Wet			N/A
PrimaLine 3 Wet	Y*		5
PrimaLine 3 XT Wet			N/A
PrimaLine 4.4 XT Gen 2 Wet			N/A
Radialux 2.2 RGB Wet			N/A
Radialux 4.4 RGB Wet			N/A
Radialux 4.4 RGBW Wet			N/A
Radialux 5.9 RGBW Wet			N/A

Chart Key

Y	Tape, channel, and connector fit
Y*	(Wet Tape Only) Tape light end caps do not fit
S	(Dry Tape Only) Connector does not fit in channel / leads should be soldered
	Does not fit width and /or height

Hotspot Values

Compatibility Visual Key

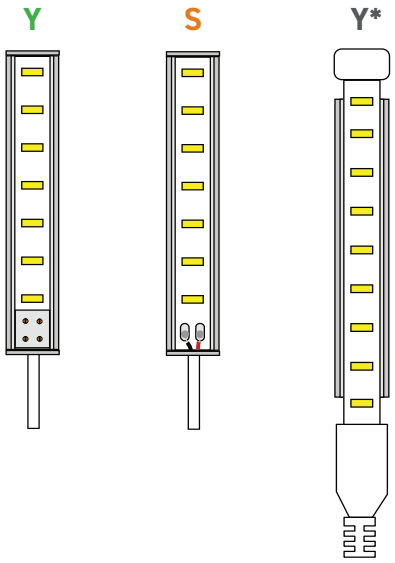

RECOMMENDED TAPE LIGHT (SOLD SEPARATELY)

Low Output

PrimaLine 2.7 LP LED Tape Light

24V DC / Maximum Run = 13 ft.				
13 ft. Spool	26 ft. Spool	Color Temperature	Lumens per Foot	CRI
AL-01-08-2400	AL-01-08-2420	2200K	160	97
AL-01-08-2405	AL-01-08-2425	2400K	170	97
AL-01-08-2401	AL-01-08-2421	2700K	188	97
AL-01-08-2402	AL-01-08-2422	3000K	202	97
AL-01-08-2403	AL-01-08-2423	4200K	224	97

High Output

PrimaLine 5.5 LP LED Tape Light

24V DC / Maximum Run = 13 ft.				
13 ft. Spool	26 ft. Spool	Color Temperature	Lumens per Foot	CRI
AL-01-07-2411	AL-01-07-2431	2700K	457	98
AL-01-07-2412	AL-01-07-2432	3000K	465	97
AL-01-07-2413	AL-01-07-2433	4200K	477	97
AL-01-07-2414	AL-01-07-2434	5000K	462	96
AL-01-07-2418	AL-01-07-2438	3500K	459	98

RECOMMENDED POWER SUPPLIES (SOLD SEPARATELY)

ALLOY'S TOP CHOICE

Alloy LED PowerFactor™ Dimmable Power Supplies with Integrated UL Listed Junction Box

Compact, highly efficient, and code-compliant power supply with versatile and smooth dimming capabilities.

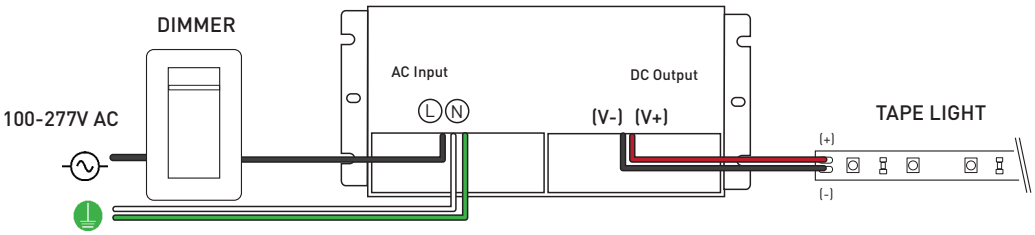

Wiring diagram is for reference only. Please refer to dimmer wiring specifications sheet for accurate directions.

99% POWER FACTOR · 120V-277V · DRY LOCATION · WET LOCATION · NEMA 4X · WARRANTY 6 YEARS · Can Be Used To Comply With Title 24 JA8 - 2019 · c UL us LISTED · RoHS

Single Tap Models

Item Number	Output Voltage	Wattage	Wet Location	Minimum Load	Dimensions (L x W x H)	Class 2
AL-98-10-12030	12V DC	30W	Yes (NEMA 4X)	10%	6.50 x 3.72 x 1.02 in.	Yes
AL-98-10-12060	12V DC	60W	Yes (NEMA 4X)	10%	7.40 x 3.72 x 1.02 in.	Yes
AL-98-10-12120	12V DC	120W	Yes (NEMA 4X)	10%	8.66 x 3.72 x 1.57 in.	No
AL-98-10-24030	24V DC	30W	Yes (NEMA 4X)	10%	6.50 x 3.72 x 1.02 in.	Yes
AL-98-10-24060	24V DC	60W	Yes (NEMA 4X)	10%	7.40 x 3.72 x 1.02 in.	Yes
AL-98-10-24096	24V DC	96W	Yes (NEMA 4X)	10%	8.66 x 3.72 x 1.57 in.	Yes
AL-98-10-24150	24V DC	150W	Yes (NEMA 4X)	10%	10.24 x 4.13 x 1.77 in.	No
AL-98-10-24200	24V DC	200W	Yes (NEMA 4X)	10%	10.24 x 4.13 x 1.77 in.	No
AL-98-10-24300	24V DC	300W	Yes (NEMA 4X)	10%	10.94 x 4.33 x 1.77 in.	No

Class 2 Compliant Multi-Tap Models

Item Number	Output Voltage	Wattage	Wet Location	Minimum Load	Dimensions (L x W x H)	Class 2
AL-98-10-12300-MT	12V DC	300W	Yes (NEMA 4X)	10%	11.85 x 4.33 x 1.77 in.	Yes
AL-98-10-24192-MT	24V DC	192W	Yes (NEMA 4X)	10%	10.94 x 4.33 x 1.77 in.	Yes
AL-98-10-24288-MT	24V DC	288W	Yes (NEMA 4X)	10%	11.85 x 4.33 x 1.77 in.	Yes

Note: PowerFactor assumes 80% load.
Inspectors prefer power supply to be used with junction box.
For dimmer compatibility, refer to drivers specification sheet.

RECOMMENDED POWER SUPPLIES (SOLD SEPARATELY)

Alloy LED Primavolt® No Minimum Load Dimmable Power Supplies with ETL Listed Junction Box

Code-compliant power supply with versatile and smooth dimming capabilities. Compatible with Incandescent, On/Off, ELV and MLV dimmers.

Dry Location Model
White model for 60W and lower

Wet Location Model
Black model for 80W and higher

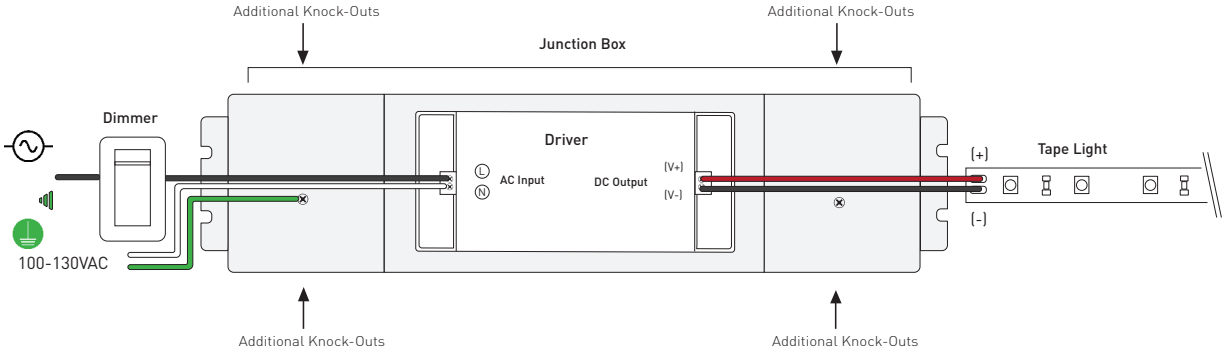

Wiring diagram is for reference only. Please refer to dimmer wiring specifications sheet for accurate directions.

Item Number	Output Voltage	Wattage	Minimum Load	Dimensions (Junction Box) (L x W x H)	Class 2
AL-98-03-12024-NM	12V DC	24W	0%	13.78 x 3.03 x 1.46 in.	Yes
AL-98-03-12048-NM	12V DC	48W	0%	13.78 x 3.03 x 1.46 in.	Yes
AL-98-03-12060-NM	12V DC	60W	0%	13.78 x 3.03 x 1.46 in.	Yes
AL-98-03-12080-NM	12V DC	80W	0%	14.96 x 3.03 x 2.24 in.	No
AL-98-03-12120-NM	12V DC	120W	0%	14.96 x 3.03 x 2.24 in.	No
AL-98-03-24024-NM	24V DC	24W	0%	13.78 x 3.03 x 1.46 in.	Yes
AL-98-03-24048-NM	24V DC	48W	0%	13.78 x 3.03 x 1.46 in.	Yes
AL-98-03-24060-NM	24V DC	60W	0%	13.78 x 3.03 x 1.46 in.	Yes
AL-98-03-24080-NM	24V DC	80W	0%	14.96 x 3.03 x 2.24 in.	Yes
AL-98-03-24096-NM	24V DC	96W	0%	14.96 x 3.03 x 2.24 in.	Yes
AL-98-03-24150-NM	24V DC	150W	0%	15.98 x 3.43 x 2.36 in.	No
AL-98-03-24200-NM	24V DC	200W	0%	15.98 x 3.43 x 2.36 in.	No

Note: Alloy LED strongly recommends using Listed Class 2 power supplies for all installations.
Always install in accordance with local and national electrical code regulations.
Inspectors prefer power supply to be used with junction box.
For dimmer compatibility, refer to drivers specification sheet.

RECOMMENDED POWER SUPPLIES (SOLD SEPARATELY)

ELV Dimmable Power Supplies for Remote Enclosures

The drivers are derated, but when installed in a small enclosure with no heatsink or air circulation, we recommend a maximum load of 40W.

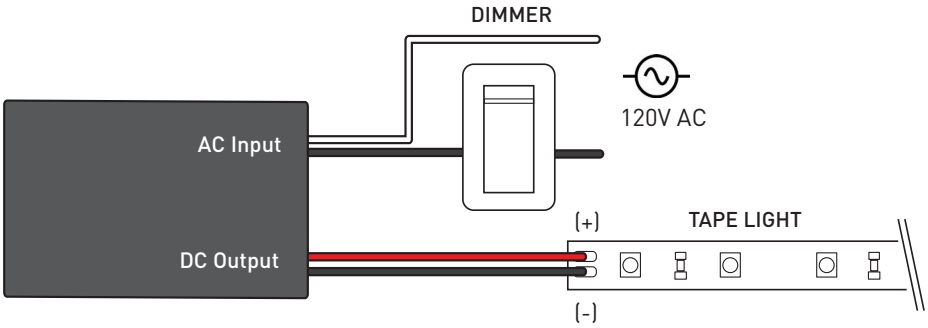

Wiring diagram is for reference only. Please refer to dimmer wiring specifications sheet for accurate directions.

120V | 98% POWER FACTOR | WARRANTY 5 YEARS | 0% Min. Load | c UL us

Item Number	Output	Wattage	Dimensions (L x W x H)	Class 2
AL-98-08-12060	12V DC	60W	2.66 x 1.30 x 0.83 in.	Yes
AL-98-08-24060	24V DC	60W	2.66 x 1.30 x 0.83 in.	Yes

Note: Inspectors prefer power supply to be used with junction box.
For dimmer compatibility, refer to drivers specification sheet.

DIMMING ACCESSORIES (SOLD SEPARATELY)

Lutron® Dimming Accessories

By participating in Lutron's OEM Advantage program, Alloy LED is able to offer a range of the highest quality low voltage power supplies and selected controls on the market.

Hi-lume Premier 0.1% EcoSystem / 3-wire LED Driver (96W 24VDC)

Hi-lume 1% LED Driver 40W
- EcoSystem / 3-wire control
- 2-wire 120V forward phase control

Lutron Vive PowPak RF Module
- RF module for EcoSystem LED driver control
- Use with the Lutron EcoSystem drivers shown to "Vive-enable" Alloy LED products

Lutron® Hi-lume LED Drivers

Item Number	Output	Wattage	Minimum Load	Class 2
AL-98-07-12040	12V DC	40W	N/A	Yes
AL-98-07-12040-3WIRE	12V DC	40W	N/A	Yes
AL-98-07-24040	24V DC	40W	N/A	Yes
AL-98-07-24040-3WIRE	24V DC	40W	N/A	Yes
AL-98-07-24096-3WIRE	24V DC	96W	N/A	Yes

Lutron® Controls

Item Number	Description	Voltage
AL-98-07-9901	EcoSystem Control Module	N/A
AL-98-07-9901-8	EcoSystem Control Module - 8 pack	N/A
AL-98-07-9950	CL Dimmer	120V AC
AL-98-07-9950-FPLATE	CL Dimmer faceplate	N/A

DIMMING ACCESSORIES (SOLD SEPARATELY)

Dimmers and Switches

SlimDim Wireless Dimmer Switch

Using long-range RF technology, these LED dimmers connect wirelessly to a receiver, offering freedom to mount anywhere. Can also be used as a fob for mobile, hand-held control.

AL-70-01-0001	SlimDim Wireless Dimmer
AL-70-01-0002	Single Color Receiver (96W max.) (sold separately)
AL-98-07-9950 -FPLATE	SlimDim Wall Plate (sold separately)

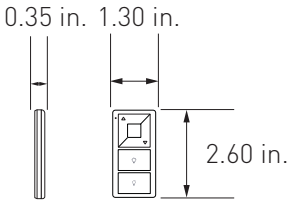

SlimDim Wireless Dimmer

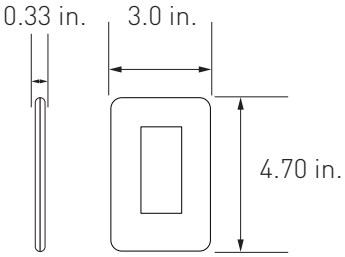

SlimDim Wall Plate (Sold Seperately)

Remote Control Dimmer Switch

Provides full dimming and on/off control, and includes a touch wheel that allows for direct visual selection of brightness. It can also operate up to four independent zones.

AL-60-03-0001	Remote Control Dimmer Switch
AL-70-01-0002	Single Channel Receiver (sold separately)
AL-60-03-0004-V2	Wireless Receiver (RGB & RGBW) (sold separately)

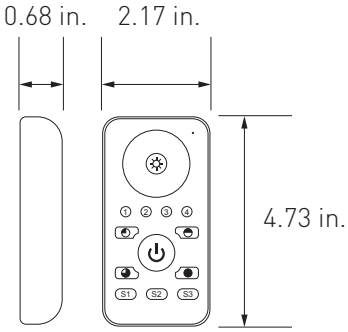

Single Channel Wireless Receiver

Pair with the Remote Control Dimmer Switch or the SlimDim Wireless Dimmer to dim PrimaLine tape lights. Use one remote to make independent lighting zones with multiple receivers with certain controllers.

AL-70-01-0002	Single Channel Wireless Receiver

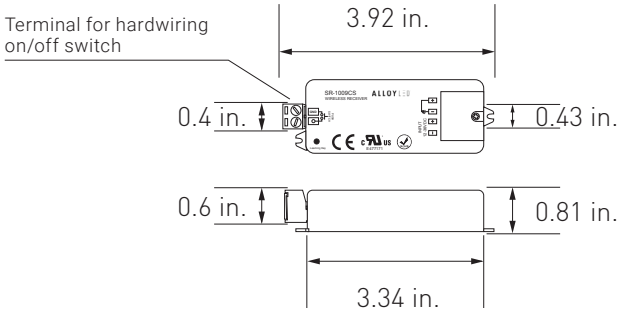

WIRING DIAGRAM

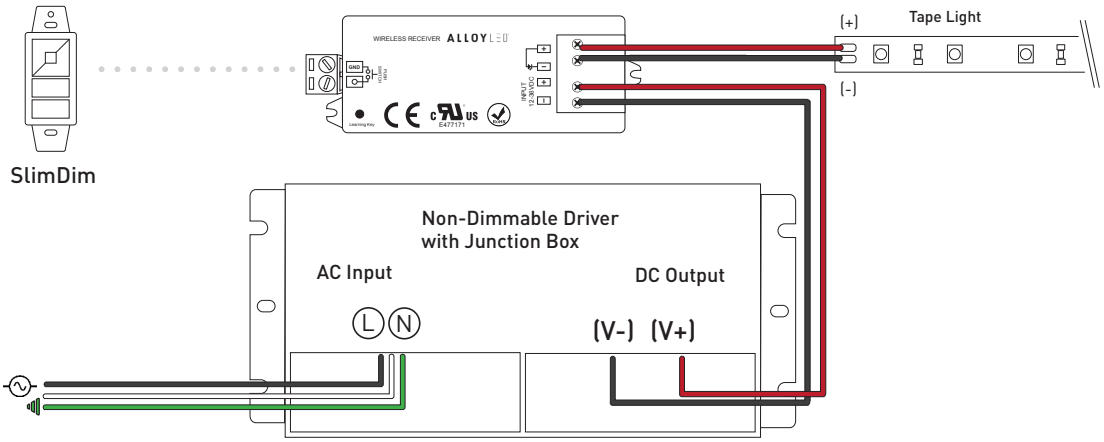

RECOMMENDED POWER SUPPLIES (SOLD SEPARATELY)

Alloy LED TRIAC/MLV/ELV Dimmable Drivers for Remote Locations

Offers stable power in even in the most remote settings. Compatibility with TRIAC, ELV, or MLV dimmers.

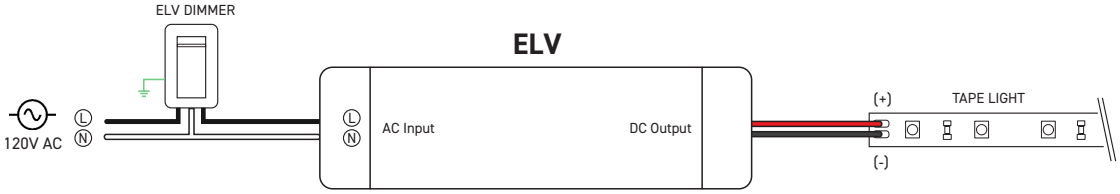

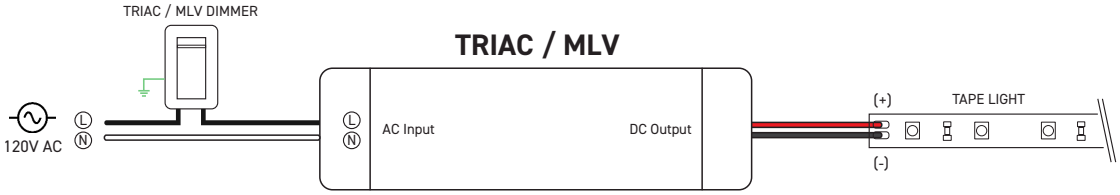

Wiring diagram is for reference only. Please refer to dimmer wiring specifications sheet for accurate directions.

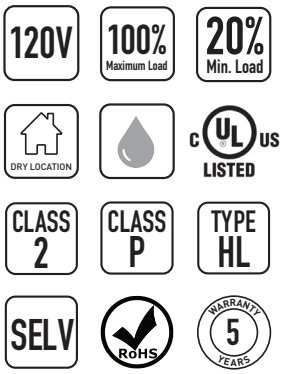

Item Number	Output Voltage	Wattage	Dimensions (L x W x H)	Class 2
AL-98-09-12060	12V DC	60W	3.31 x 1.57 x 0.98	Yes
AL-98-09-24096	24V DC	96W	3.31 x 1.57 x 0.98	Yes

Note: Alloy LED strongly recommends using Listed Class 2 power supplies for all installations.
Always install in accordance with local and national electrical code regulations.
Inspectors prefer power supply to be used with junction box.
For dimmer compatibility, refer to drivers specification sheet.